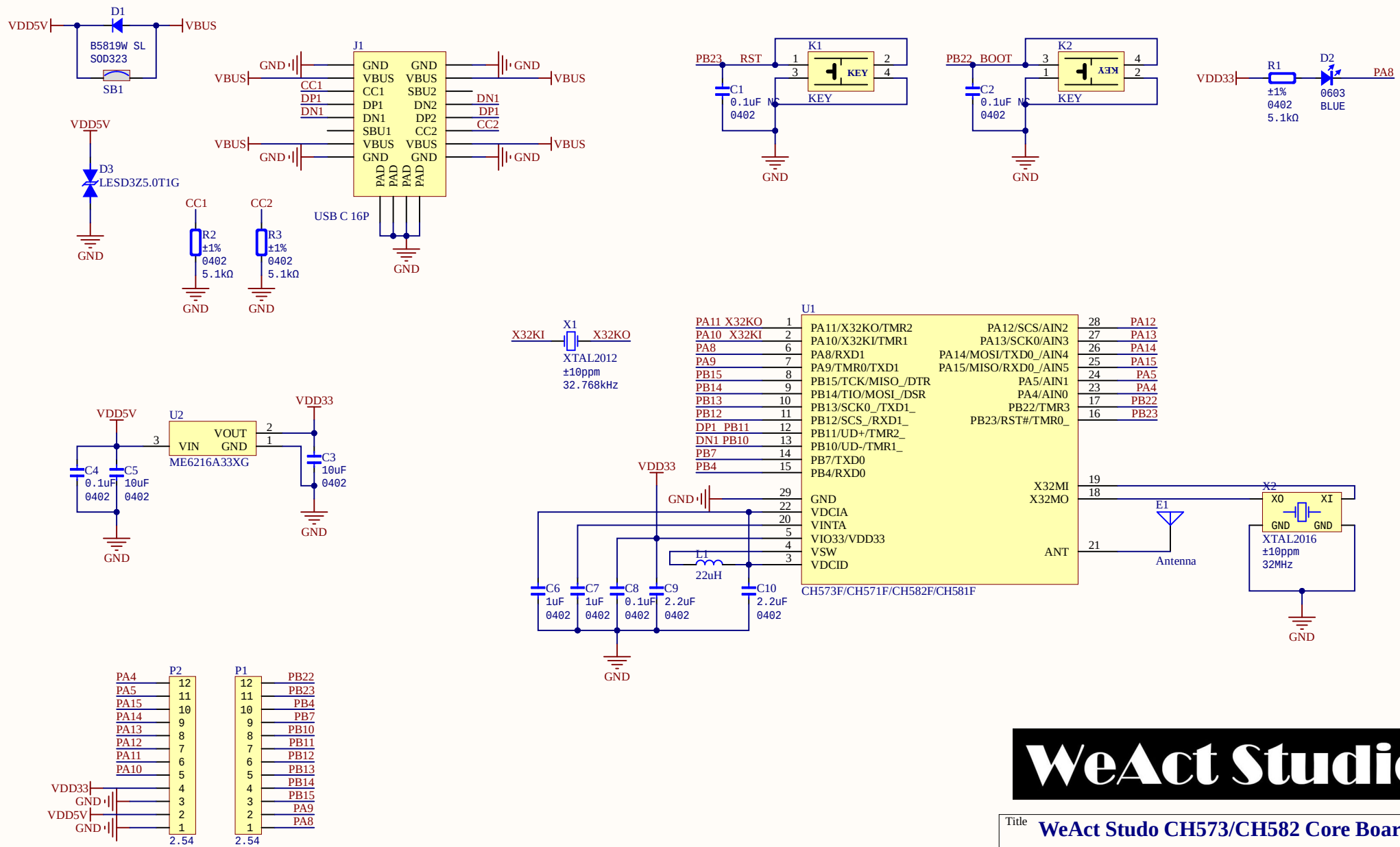

WeAct Studio

Title	WeAct Studo CH573/CH582 Core Board	
Size A4	Number	Revision V1.0
Date: 9/06/2022	Sheet of	
File: F:\WeActStudio1\..\WeAct-CH57xCore3.2.SchDoc	Drawn By:	